1974-1981 CAMARO BUCKET SEAT FRONT 3 POINT RETRACTOR INSTALLATION INSTRUCTIONS

DISASSEMBLY

1. REMOVE TRIM AT HEADLINER AND REMOVE RETRACTOR FROM ROOF STRUCTURE.
SET HARDWARE IN A SAFE PLACE TO BE USED WHEN REASSEMBLING.
2. REMOVE BOLT HOLDING ANCHOR IN PLACE.
REMOVE ASSEMBLY FROM CAR.

REASSEMBLY

ASSEMBLE RETRACTOR AND FLOOR ANCHOR WITHOUT HARDWARE TO FAMILIARIZE YOURSELF WITH THE WAY THE SEATBELT SOLUTIONS RETROFIT SEAT BELT INSTALLS IN YOUR CAR.
ALWAYS CHECK FOR CLEARANCE AND INTERFERENCE ISSUES BEFORE FINAL INSTALLATION.

3. SLIP ANCHOR THROUGH SLOT IN PLASTIC TRIM AND BOLT IN PLACE.
4. ATTACH NEW RETRACTOR TO ROOF STRUCTURE USING ORIGINAL HARDWARE AND NEW WASHERS, USING CARE TO NOT TWIST SEATBELT WEBBING, AND REASSEMBLE HEADLINER TRIM PARTS.

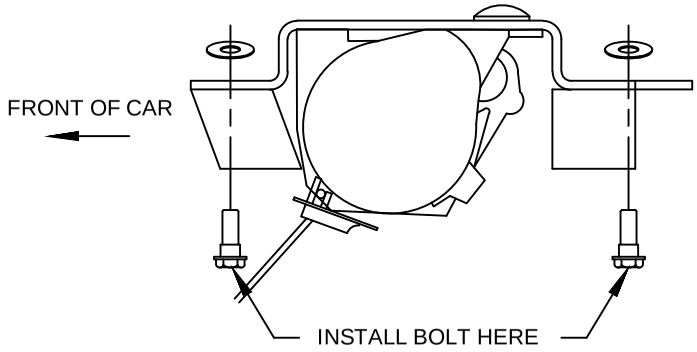

ATTENTION
ALWAYS CHECK FOR INTERFERENCE BEFORE FINAL INSTALLATION.